No.14301

14+

HYPER GO

1:14 RC HIGH SPEED CAR USER MANUAL

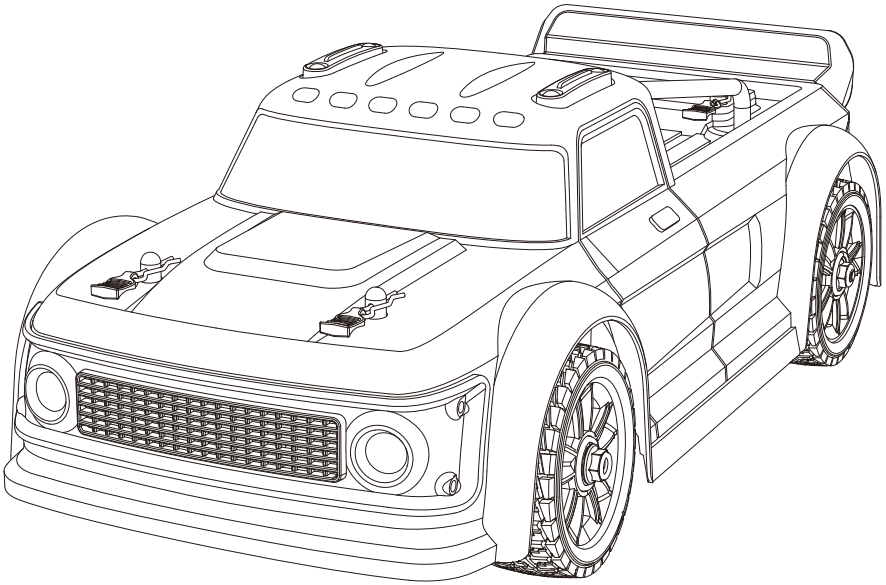

V3.0

4WD REMOTE CONTROL

The instruction sheet for this product is just for your reference. We reserve the right to make changes or adjustments on the product without prior notification. Please refer to the official information.

Warning:

Choking hazard! This product contains small parts. NOT suitable for children under 3 years. Contains electrical components and should be kept dry at all times. Regularly check the battery charger wires, plugs and shell and other components for damage. DO NOT use if any part is damaged.

Warnings & Cautions

1. Detachable small parts should be stored safely and out of reach of children.
2. If interference is experienced, turn the model off and try it again in a different area.
3. Transmitter will not function correctly if the batteries are low. Please replace the batteries.
4. Please discard old/used batteries in a safe manner. Consider your environment!
5. Please store the remote control model in cool, dry place.
6. DO NOT expose to fire or high temperatures, do not store in moist place.
7. Once the battery get wet, wipe immediately with a soft dry cloth.
   If the battery any deformation, please stop using.
8. If you don't use the model for a long time, please raise the chassis to let the wheels hang in the air.

Precautions for Battery Use

1. Transmitter uses 2x1.5V "AA" batteries.
2. Please pay attention to correct polarity when replacing batteries.
3. Rechargeable batteries should be charged under adult supervision.
4. Do not mix old and new batteries. Do not mix alkaline, standard (carbon-zinc), or rechargeable batteries.
5. After the battery is exhausted, the model should be removed.
6. Exhaust battery should be safety dispose!
7. DO NOT short circuit any terminals.
8. DO NOT attempt to recharge non rechargeable batteries.
9. Remove batteries from the model when charging.
10. DO NOT put batteries into a fire or into water.
11. The rated input voltage battery charger MUST be suitable for your mains power voltage.
12. During charging it is quite normal for the charger and batteries to heat up.
13. Do not swallow battery!
14. Store only in cool, dry and dark places and should be keep out of the children!
15. When the battery leaks the liquid and let it into you eyes, please right away rinse them and consult an ophthalmologist.

Safety Precautions

- It is a radio control model, not a toy!
- In order to enjoy running the car, you need to finish assembly before operation. Do routine maintenance work after operation. Replacement parts and option parts are available separately.
- Improper usage with Alkaline cells or rechargeable batteries may damage the electronics for the car or the radio.

In order to operate the car safely. Be sure that you have observed the following points:

⚠ Please follow the points as below in order to prevent accident from happening to the car and people.

●Be sure to read thoroughly the manual before you begin. Fresh user should seek advice from people having rich experience in order to assemble the model correctly.

●Cutters, nippers and screwdrivers need careful handling.

●As the product contains small and sharp parts, assemble and store this product only in places out of the reach of children.

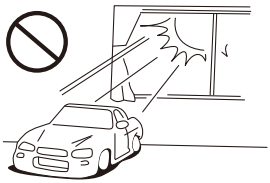

●Do not expose this model to high temperature, humidity or direct sunlight.

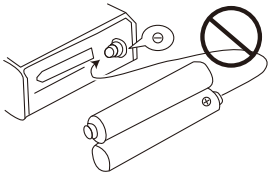

●Never reverse connection/ disassemble the battery. This may lead to damage and leakage.

●When the model is not in use, always turn off the receiver and transmitter. Further more, disconnect the batteries and remove them from the model and the transmitter. This may be dangerous such as overheat and leakage.

Operating Your Model Safely

⚠ Do NOT operate the model in the following places and situations.
(Non-observance may lead to accident!)

●Operate your model in spacious and safe areas! Do not operate it:

1. On road!
2. In places where children and many people gather.
3. In residential districts and parks!
4. Do not operate the model on public roads, in crowded places and near infant as it may cause accidents.
5. Indoors and in limited space! Non-observance may result in personal injury and property damage!

●The car must stop immediately and check for the reasons when it is operating abnormal.
As long as the problem is not cleared, do NOT operate it! This may lead to further trouble and unforeseen accidents!

●Always check the radio batteries!
With weak dry batteries, transmission and reception of the radio would fall off. You may lose control of your model in such condition. This may also cause serious accidents!

●Keep in mind that people around you may also operate a radio control model!
NEVER share the same frequency with somebody else at the same time! Otherwise, Radio signals will be mixed up and you will lose control to your model. This may lead to accidents.

●Do NOT put fingers or any objects inside rotating and moving parts!

●Right after use, do NOT touch the motor! Danger of burning yourself!

FCC PART 15 B Notice:
CAUTION

Warning: Changes or modifications to this unit not expressly approved by the party responsible for compliance could void the user's authority to operate the equipment.

NOTE: This equipment has been tested and found to comply with the limits for a Class B digital device, pursuant to Part 15 of the FCC Rules. These limits are designed to provide reasonable protection against harmful interference in a residential installation. This equipment generates, uses and can radiate radio frequency energy and, if not installed and used in accordance with the instructions, may cause harmful interference to radio communications.

However, there is no guarantee that interference will not occur in a particular installation. If this equipment does cause harmful interference to radio or television reception, which can be determined by turning the equipment off and on, the user is encouraged to try to correct the interference by one or more of the following measures:

- Reorient or relocate the receiving antenna.
- Increase the separation between the equipment and receiver.
- Connect the equipment into an outlet on a circuit different from that to which the receiver is connected.
- Consult the dealer or an experienced radio/TV technician for help.

This device complies with Part 15 of the FCC Rules. Operation is subject to the following two conditions:

(1) this device may not cause harmful interference, and

(2) this device must accept any interference received, including interference that may cause undesired operation.

电池使用注意事项

1. 遥控器使用2节1.5V“AA”号电池;
2. 安装或更换电池时请注意极性;
3. 充电电池只能在成人监护下充电;
4. 不可混用新旧或不同型号的电池;
5. 电池电量用尽后,应从模型内取出;
6. 将耗尽电量的电池交给专门的环保部门处理!
7. 接线端不应短路;
8. 非充电电池不可充电;
9. 充电电池充电前应从模型中取出;
10. 请不要将坏的电池、电池组分解或扔到火中、水里,以免发生意外;
11. 充电器的额定输入电压必须与当地的家用电压相符;
12. 在充电过程中,充电器和电池出现微温,属于正常现象。
13. 不可吞咽电池!
14. 将电池放在凉爽、干燥避光及小孩接触不到的地方!
15. 电池漏液而且滴到眼睛里,请马上用大量的清水清洗,然后到附近的医院就医。

Power Switch 开关

1. Turn on the power switch of the transmitter, the signal indicator light of transmitter flashes.
2. Press the power button of high speed car, the indicator light of high speed car flashes.
3. When the indicator light stays on, the high speed car can be operated to play.

1. 打开遥控器电源开关，遥控器信号指示灯闪烁。
2. 按下高速车电调的电源开关按钮，高速车指示灯闪烁。
3. 当指示灯变为常亮后，便可操控高速车。

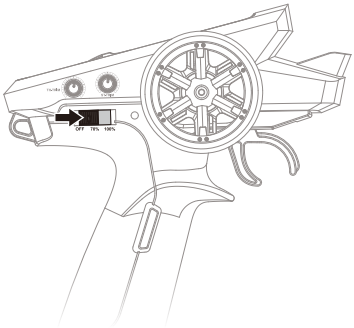

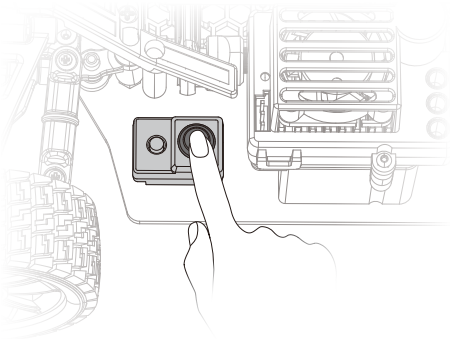

⚠

- When turn on the transmitter, please DO NOT touch the throttle and steering. After turn on the transmitter’s power, please operate after the indicator light of transmitter staying on.
- Please comply the principle of “turn on the transmitter firstly, then turn on the high speed car”.
- In the frequency matching, please make sure there is only one pair of transmitter and high speed car in matching at the same time, otherwise the frequency will match wrongly.

- 当准备开启遥控器时，请勿触动油门和转向。打开遥控器开关，遥控器指示灯点亮后才能进行操作。
- 开机时应遵循“先开启遥控器，再开启高速车”的原则。
- 在同一时刻，请确保对码的遥控器和高速车只有一对，否则会对错遥控器。

R3B Receiver 接收器

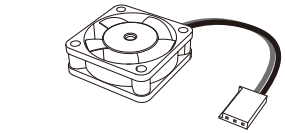

Fan
风扇
(VCC/FAN)

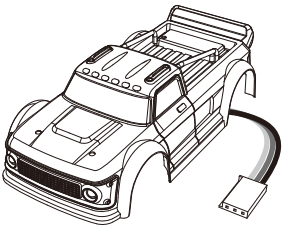

Body
车壳
(CH3)

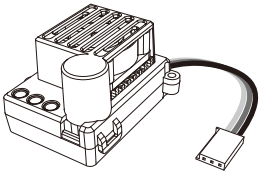

ESC
电调
(CH2)

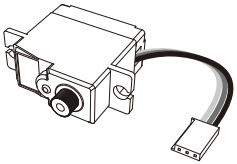

Steering
servo
转向舵机
(CH1)

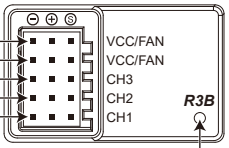

VCC/FAN
VCC/FAN
CH3
CH2
CH1

Antenna
(Please make sure it in vertical direction)
天线
(务必保持竖直状态)

VCC/FAN: Power Interface
(VCC=5-6V)
VCC/FAN: 供电接口(VCC=5-6V)

Indicator situation 指示灯状态	Meanings 含义
Stays on 常亮	Signaled 有信号
Flashes 闪烁	No Signal 无信号

⚠ Warning: Please make sure the connection is correct.
警告：请注意连接是否正确。

G3 Gryo 陀螺仪

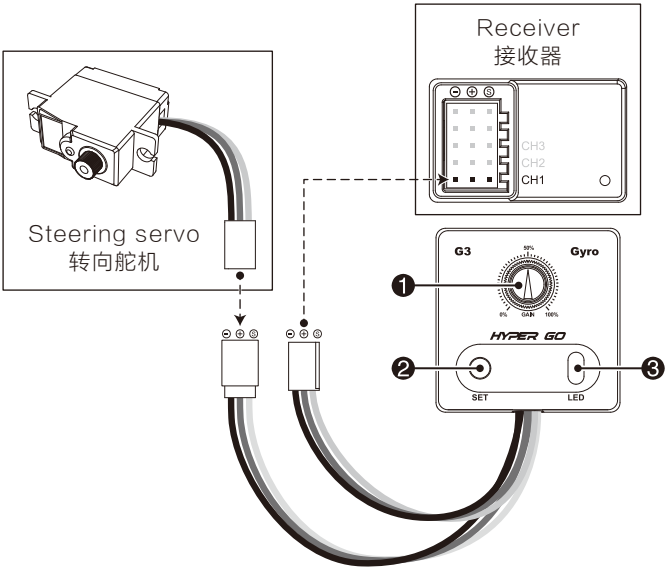

①GAIN

Spin the knob from the left to right, the gyro intervention gains value 0-100%.
旋钮从左到右调整陀螺仪介入增益值0-100%。

②SET 设置

1. Reverse/Normal Switching 正反向切换

When the power on, long press the【SET】3 seconds, the LED from red to green or from the green to red, it means the switch is successful. (Red LED is on for Normal, Green LED is for Reverse)
通电状态下，长按3秒【SET】，LED颜色由红色变为绿色，或者由绿色变为红色，则代表已切换成功。(LED红色常亮为反向，LED绿色为正向。)

⚠ The default direction of servo is Reverse. If not modified, please keep the red constant LED light as normal state.
车辆标配的舵机方向为反向。如未做改装，请保持LED正常状态为红色常亮。

2. EPA (End point adjustment) 行程调节

⚠ Before setting, please make sure the gyro direction is the same as the direction of vehicle steering.
设置前请先确定陀螺仪方向与车辆转向的方向相同。

a. Before power on, press and hold【SET】, then turn on the vehicle power (please release【SET】ASAP after turning on the power, if more than 5 seconds, it will restore the factory setting), LED red flashing, it enters into the EPA setting.
b. Rotate the remote control rudder, turn the rudder to the desired position (to the left or right), keep the current state, short press【SET】then the green LED flashing, it completes the single-side EPA setting.

c. Rotate the remote control direction rudder to turn the servo to the desired position in another direction and keep the current state, short press【SET】and the red and green LEDs will flash (about 2 seconds). When the LEDs will be on, the EPA setting is finished.

*Restore factory setting: Before power on, press the【SET】, then hold for 5 seconds after power on, the red LED and green LED will flash at the same time, then return to default setting (default 1100us-1900us).

a.通电前，按住【SET】，然后开启车辆电源（开启电源后请松开【SET】，如超过5秒，则会恢复出厂设置），LED红色快闪进入EPA 设置。

b.旋转遥控器方向舵，将舵机转到所需要的位置上（可向左边或右边），保持当前状态，短按“SET”后绿色LED快闪，完成单侧EPA设置。

c.旋转遥控器方向舵使舵机转到另一个方向所需要的位置并保持当前状态，短按“SET”后红色与绿色LED快闪（约2秒）。LED变为常亮状态，EPA设置完成。

*恢复出厂设置：通电前，按住【SET】通电后持续5秒，红色LED与绿色LED同时快闪后恢复成默认设置（默认1100us-1900us）。

③LED status 灯状态

LED	Status 状态
Power on fast flashing 开机快闪	Gyro initialization (time about 2 seconds). 陀螺仪初始化（时间约为2秒）
Slow flashing 慢闪	No Transmitter signal. 无遥控信号
Red on 红色常亮	Working，gyro direction is Reverse. 正常工作中，陀螺仪方向为反向
Green on 绿色常亮	Working，gyro direction is Normal. 正常工作中，陀螺仪方向为正向
Fast Flashing 快闪	In EPA Setting. EPA行程设置状态

E45P Brushless ESC 电调

⚠ Please Do Not forcible/reversely insert all sockets.
所有插座请勿强行反插。

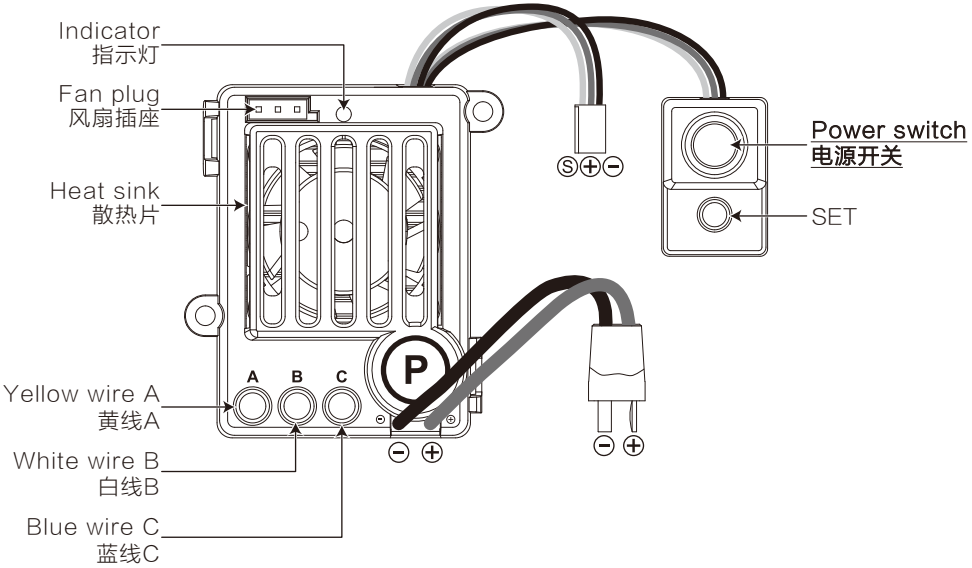

Indicator light situation 指示灯状态	Meanings 含义
Stays on 常亮	Signaled 有信号
Flash quickly 快闪	a. No signal 无信号 b. Pull the trigger 扣动扳机
Flash slowly 慢闪	Low voltage 低电压
Flash twice 闪两下	Over heat protection 过热保护
Off 熄灭	Stuck protection 堵转保护

Set the throttle range (Transmitter calibration)
设定油门行程（遥控器校准）

When replacing the transmitter with a new one, it is recommended to reset the throttle range, otherwise the ESC may become inoperable or abnormal.
当更换新的遥控器时，建议重新设置油门行程，否则可能会导致ESC无法使用或异常。

ESC enters “the throttle range” state:
ESC进入油门行程校准模式：

1. Turn on the transmitter, adjust the throttle trim to the middle position, and keep the status of “D/R”,“EPA”,“ATL” and other parameters of the throttle channel of the transmitter at 100%;
   打开遥控器，将油门微调调至中间位置，同时请保持遥控器油门通道的“D/R”、“EPA”、“ATL”等参数状态为100%；
2. The ESC is connected to the battery, but in the off state, keep holding down the【SET】state, short press ON/OFF, the LED on the ESC will start to flash, and at the same time, the motor will start to chirp, at this time, you can release the【SET】button. The red light on the ESC is in the fast-flashing state, and it has entered “the throttle range” state.
   电调连接电池，但处于关闭状态，保持按住【SET】状态，短按ON/OFF，电调上LED开始闪烁，同时电机开始鸣叫，此时即可松开【SET】按键。电调红灯处于快闪状态，已进入油门行程校准状态。

Calibration steps (please follow the order):
校准步骤 (请按照顺序进行)：

1. Keep the transmitter throttle in the mid-point position, press【SET】once, the red light of ESC goes out and the motor “Di”, indicating that the mid-point position has been successfully stored;
   保持遥控器油门处于中点位置，按一次【SET】，ESC红灯熄灭，电机“Di”，表明已成功储存中点位置；

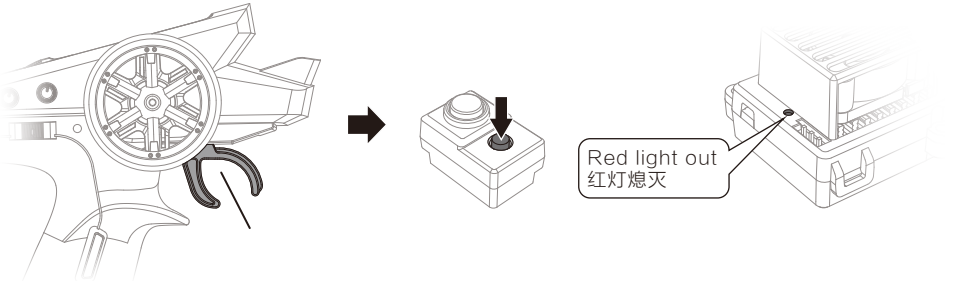

2. Keep the throttle of the transmitter in the maximum forward position, press【SET】once, the red light of ESC flashes twice and then goes out, the motor “Di.Di”, indicating that the maximum forward position has been successfully stored;
保持遥控器油门处于最大前进位置，按一次【SET】，ESC红灯闪烁2次后熄灭，电机“Di.Di”，表明已成功储存最大前进位置；

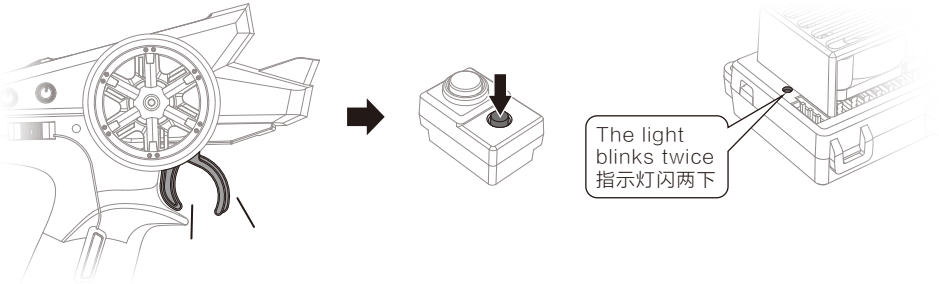

3. Keep the transmitter throttle in the maximum backward position, press【SET】once, ESC red light blinks 3 times and then goes out, motor “Di.Di.Di”, indicating that the maximum backward position has been successfully stored.
保持遥控器油门处于最大后退位置，按一次【SET】，ESC红灯闪烁3次后熄灭，电机“Di.Di.Di”，表明已成功储存最大后退位置。

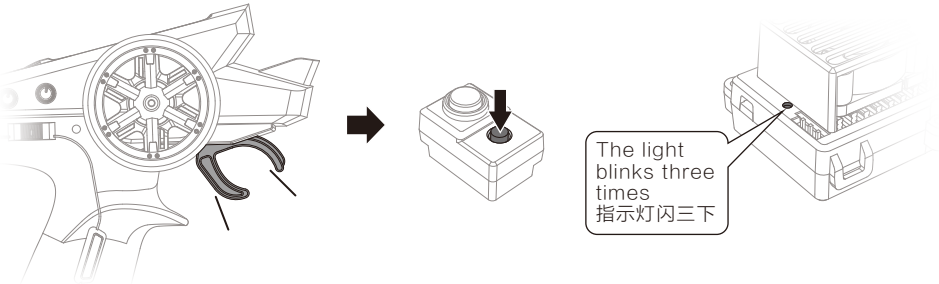

After completing the above three steps, it means the calibration has been completed. When the transmitter throttle returns to the centre position, the ESC can work normally.
完成以上三个步骤后，代表校准已完成。遥控器油门回到中点位置时，ESC即可正常工作。

> It is recommended to perform a throttle travel calibration when starting a new vehicle to get the most accurate experience.
> 建议新车入手时，进行一次油门行程校准，以获得最精准的体验。

Throttle range back to initial setting
油门行程恢复初始设置

When the ESC is powered on, press and hold【SET】for 5 seconds, the motor will emit “Di.Di”, the ESC indicator light will flash twice, and the throttle range will be restored to the initial setting.
在ESC通电并开启状态下，长按【SET】5秒，电机发出“Di.Di”, ESC指灯闪两下，油门行程恢复为初始设置。

T3B Transmitter 遥控器

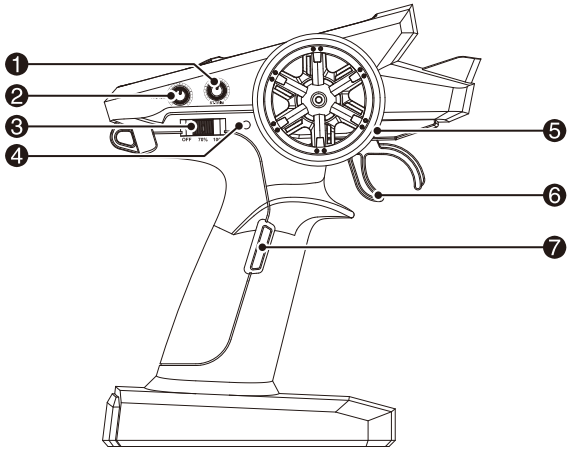

①ST.TRIM
(Steering servo trimmer)
ST.TRIM（转向舵机微调）

②TH.TRIM（Throttle trimmer)
TH.TRIM（油门中位微调）

③Power switch
电源开关
(OFF-70%TH-100%TH)

④Indicator light
指示灯

⑤CH1：ST（Steering)
CH1：ST（转向）

⑥CH2：TH（Throttle)
CH2：TH（油门）

⑦Fn（CH3 Light control)
Fn（CH3灯控）

①ST.TRIM (Steering servo trimmer 转向舵机微调)

If the car cannot go straightly during driving, it can be adjusted through the ST.TRIM.
车辆行驶过程中如无法直线行驶，可通过此微调进行调整。

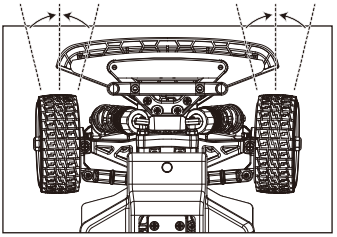

②TH.TRIM (Throttle trimmer 油门中位微调)

If the car can’t be stop when the TH in the middle place, you can adjust the button to stop the car.
如TH（油门）在中位状态下，车辆无法正常停止，可通过此微调进行调节，使车辆停止。

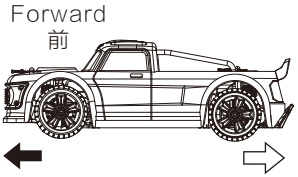

③Power/Speed switch
电源/速度档位开关

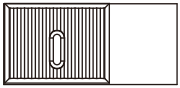

OFF 70% 100%

OFF (关)	70% (70% Throttle) (70%油门)	100% (100% Throttle) (100%油门)

④Indicator light
指示灯

Stays on 常亮	Working well 正常
Flash quickly 快闪	Frequency mating 对码状态
Flash slowly 慢闪	Low battery of transmitter 遥控器电池电量低

⑤CH1：ST (Steering 转向)

Middle 中位

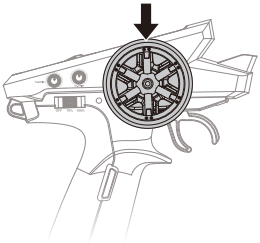

Turn left 左转

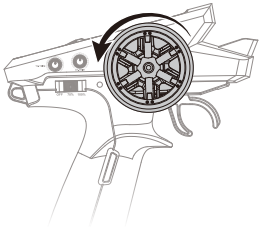

Turn right 右转

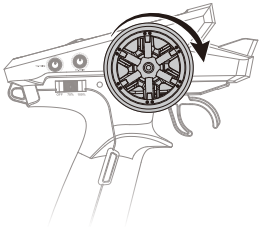

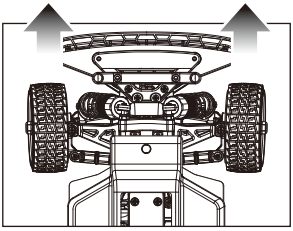

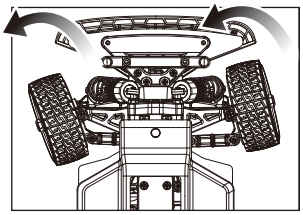

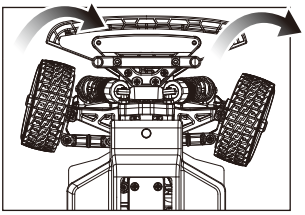

⑥CH2：TH (Throttle 油门)

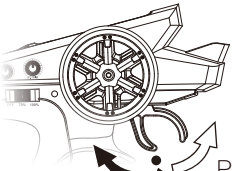

Pull back 向后拉

Push forward 向前推

Middle 中位

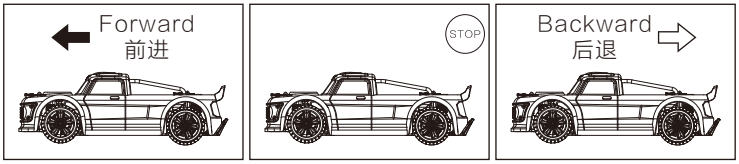

Brake: When the car is going forward, pull the transmitter trigger back, and the car enters into the braking state. After the trigger is in the middle, push back again, and the car can move backward.

刹车：当车辆向前行驶时，遥控器推动后退，车辆进入刹车状态，需油门归中后，再次推动后退，车辆才能后退。

*When the car is in reverse situation, it does not the brake function.
车辆处于后退状态下，无刹车功能。

⑦Fn (CH3 Light control 灯控)

Short Press the “ ” button to turn on/off the light of high speed car.
短按“ ”按键时，控制高速车灯光开启或关闭。

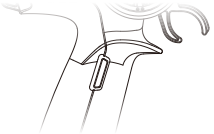

Install the Transmitter’s Battery
遥控器安装电池

Open the transmitter’s battery cover, insert 2 AA batteries according to the indicated positive and negative direction, close the battery cover.
将遥控器电池盖打开，按照遥控器指示的正负极，正确装入2节AA电池，再重新盖上电池盖。

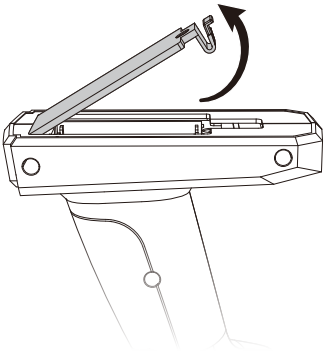

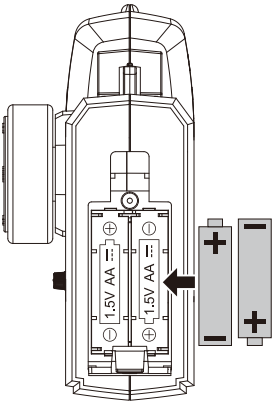

Charge 充电

It is recommended to use a 5V 2A adapter for charging.
- When charging, the indicator light of charger is green and flashes;
- When the battery is fully charged, the green indicator light of the charger stays on.

建议使用5V 2A USB适配器进行充电。
- 电池充电时，充电器绿色指示灯闪烁；
- 电池满电时，充电器绿色指示灯常亮。

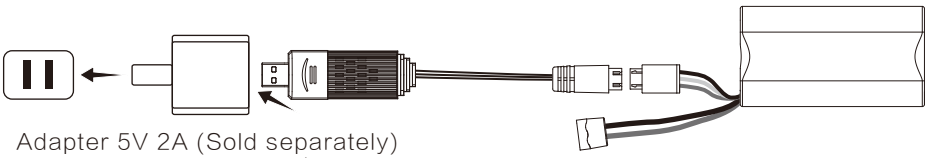

Adapter 5V 2A (Sold separately)
适配器5V 2A (需另购)

Install the dust-proof cover 安装防尘罩

1. Align the 3 holes of the cover with the bracket and install.
   将防尘罩3个孔位对准防尘罩支架装入。

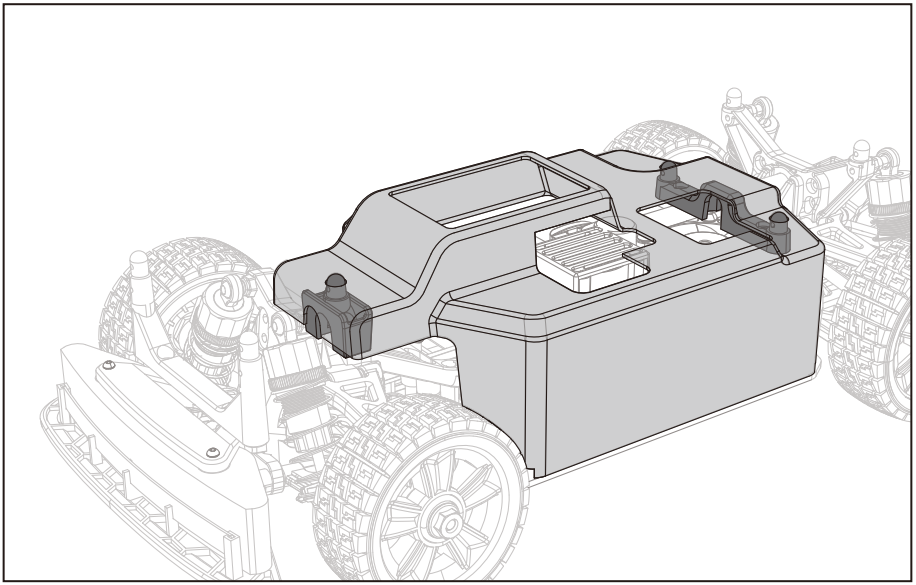

2. Insert the 3 shell buckles into the cover and lock.
   将3个车壳扣插入锁紧防尘罩。

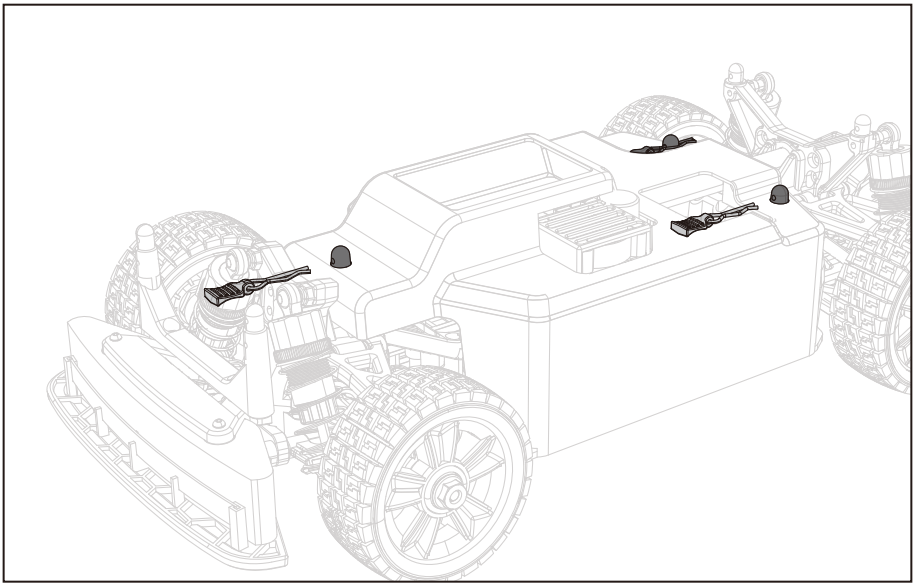

Install Car Shell 安装车壳

1. Aline the 4 holes of the car shell with holders, then install it.
   将车壳4个孔位对准车壳支架装入。

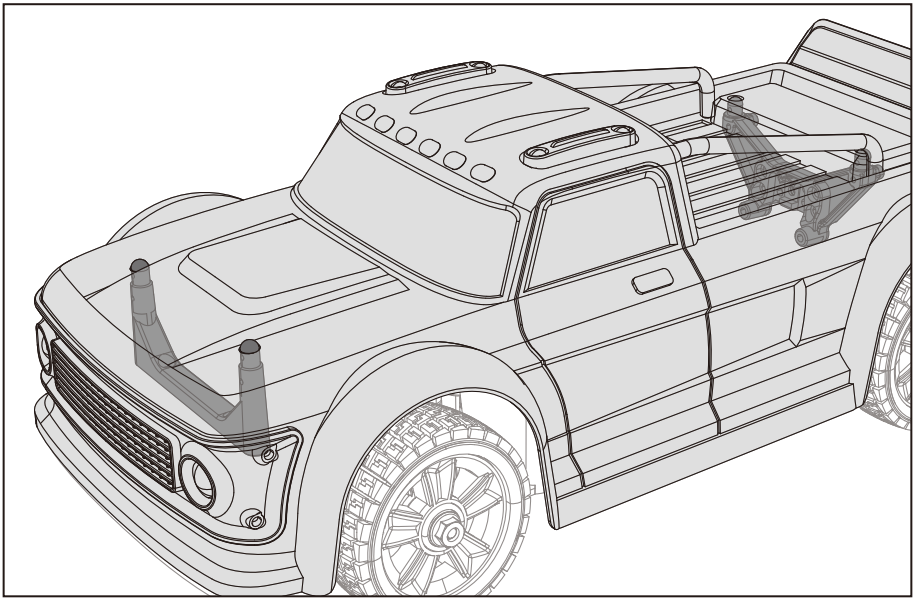

2. Insert the 4 clips into the holes to lock the car body.
   将4个车壳扣插入锁紧车壳。

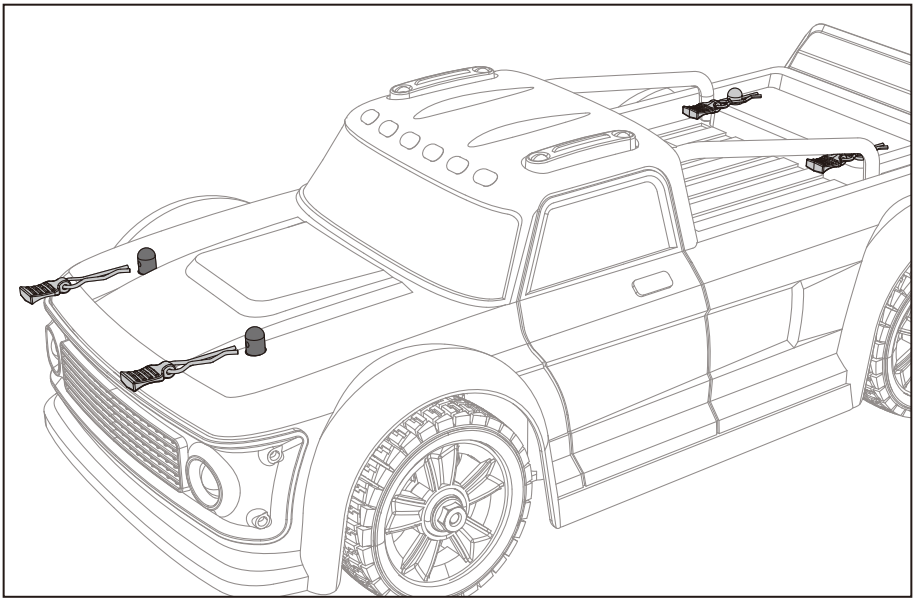

14200 Front Swing Set 前摆臂组件

Screw 螺丝:

HKB26125 Ø2.6x12.5mm 2PCS

Screws
沉头螺丝

14200

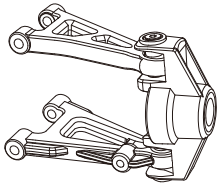

Bearing 轴承:

R168Z 2PCS

Ball bearing
滚珠轴承

Pivot balls 球头:

Q1601 2PCS

Steering pivot balls
球头

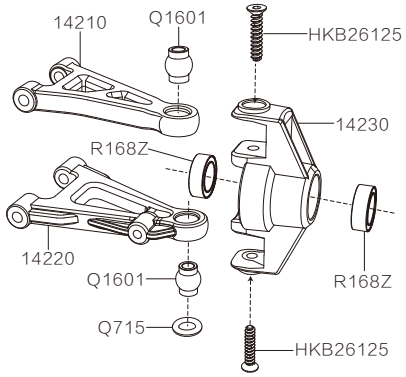

14201 Rear Swing Set 后摆臂组件

Screw 螺丝:

HKB2312 Ø2.3x12mm 1PCS

Screws
沉头螺丝

Bearing 轴承:

R168Z 2PCS

Ball bearing
滚珠轴承

14201

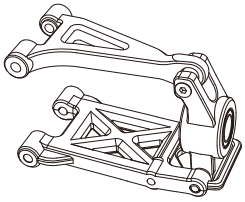

Rear hub pins 单花轴:

M2523 1PCS

Rear hub pins
后固定座插销

Pivot balls 球头:

Q1602 1PCS

Steering pivot balls
球头

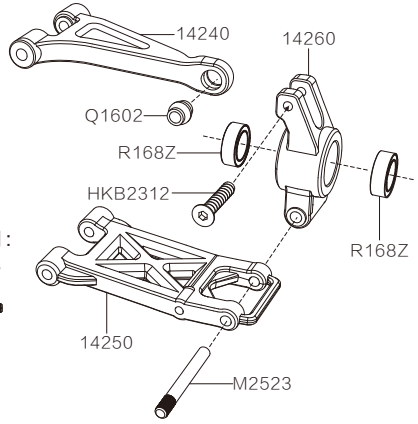

14400Y Metal Gears Main Driving Set 全金属主传动组件

Bearing 轴承:

R168Z 2PCS

Ball bearing
滚珠轴承

R1810 2PCS

Ball bearing
滚珠轴承

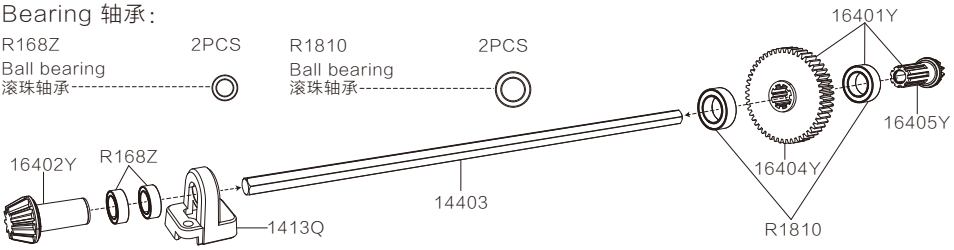

14400Y

1413Q

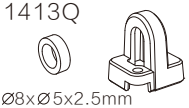

Ø8xØ5x2.5mm

16420Y Metal Gears Diff Assembly 全金属齿轮差速箱

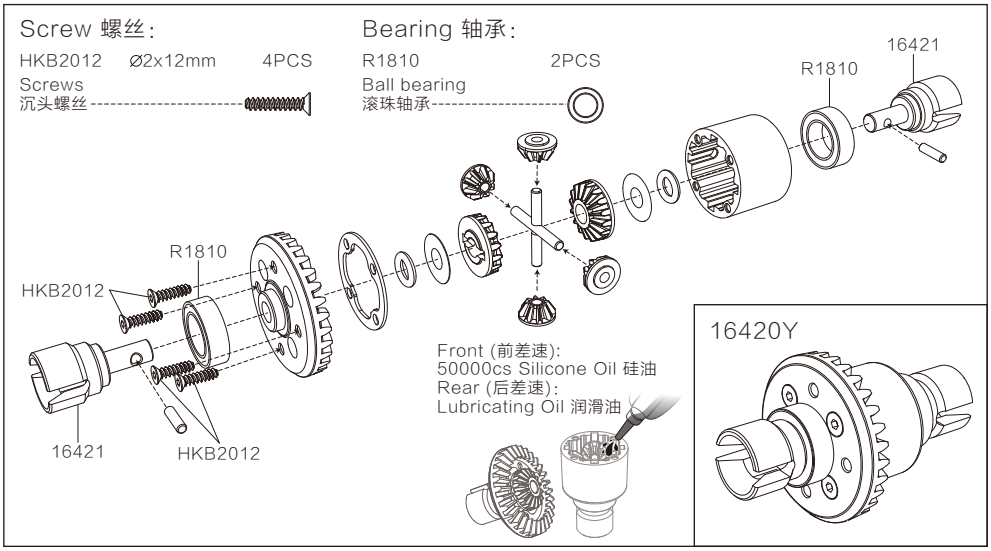

14500 Oil Filled Shock 油压避震

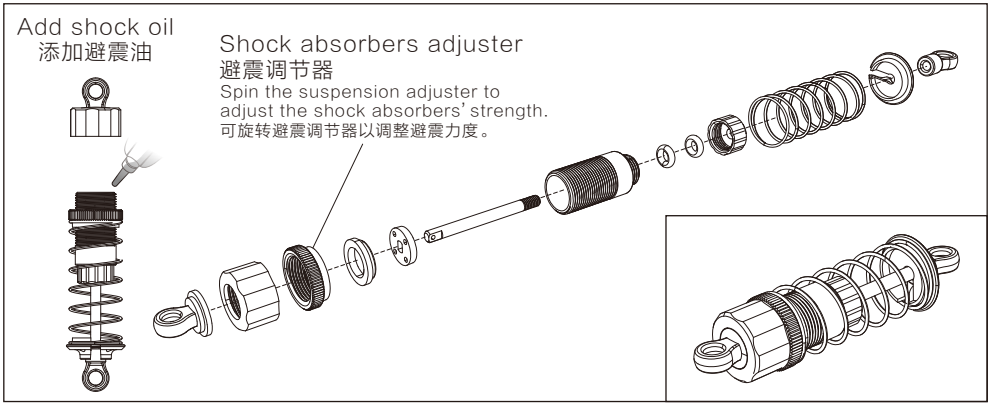

14700 Servo Assembly 舵机组件

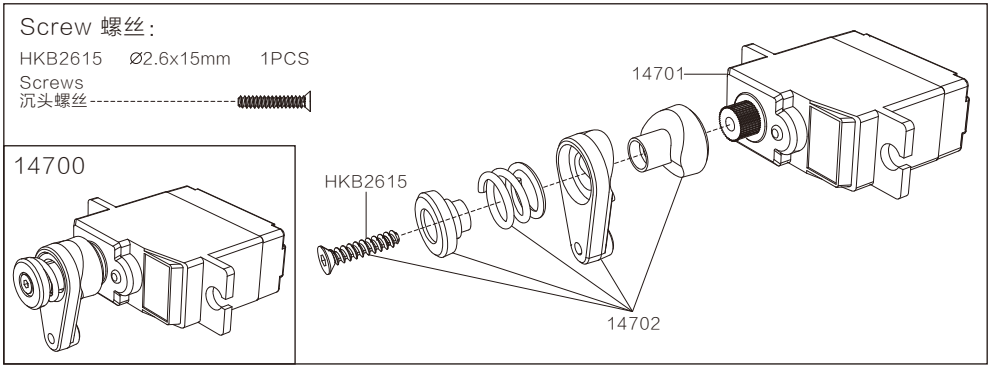

B284K & 16397 Motor Assembly 电机组件

Screw 螺丝:

HTM3060 Ø3x6mm 2PCS
Screws
半圆头机丝螺丝

HTB3015 Ø3x15mm 2PCS
Screws
半圆头螺丝

M3030 Ø3x3mm 1PCS
Hexagon socket machine screw
内六角机丝螺丝

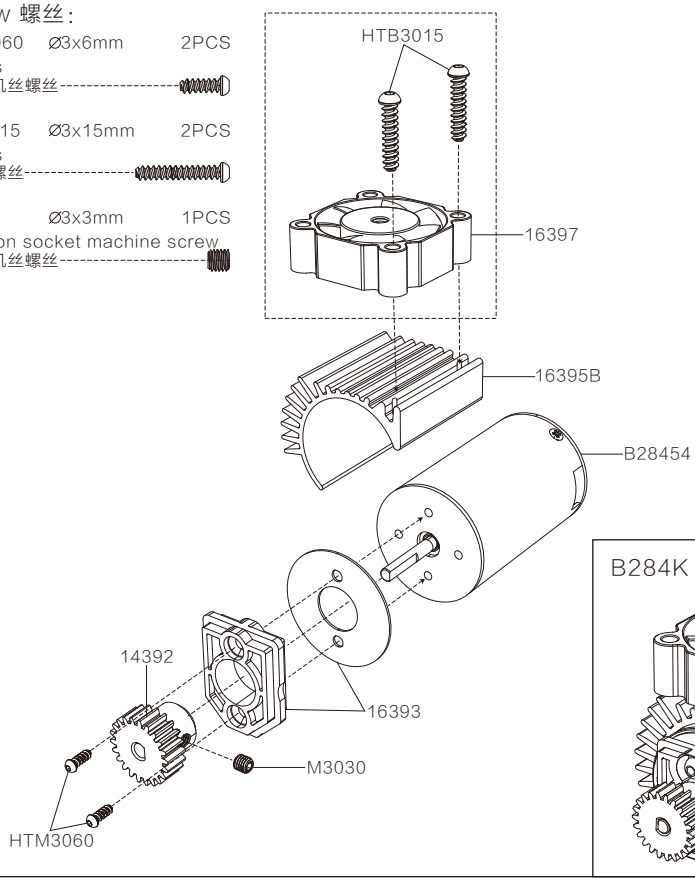

B284K & 16397

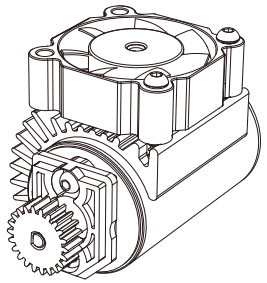

14430 Steering Assembly 转向传动组件

Screw 螺丝:

HKB2312 Ø2.3x12mm 4PCS
Screws
沉头螺丝

HKB2012 Ø2x12mm 2PCS
Screws
沉头螺丝

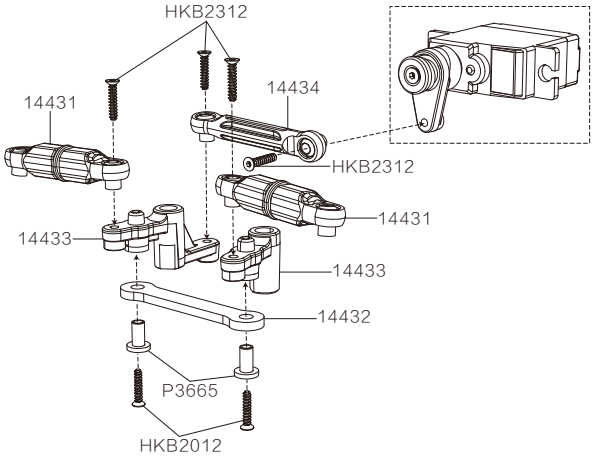

14430

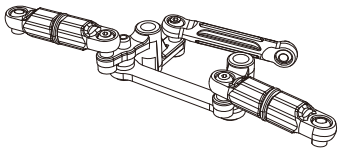

14100 Front Bumper Assembly 前防撞组件

Screw 螺丝:

HTB2615 Ø2.6x15mm 4PCS

Screws
半圆头螺丝

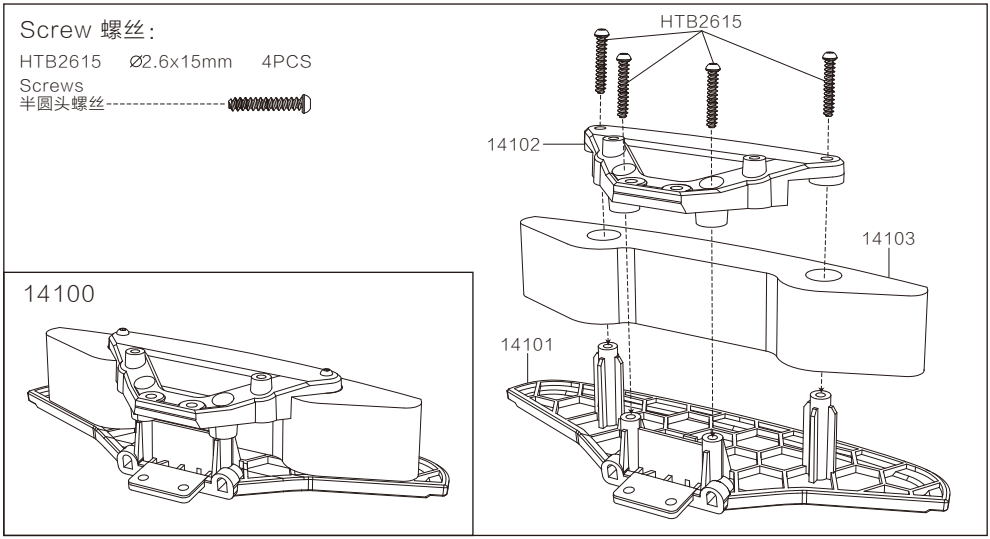

14110 Rear Bumper Assembly 后防撞组件

Screw 螺丝:

HTB2610 Ø2.6x10mm 2PCS

Screws
半圆头螺丝

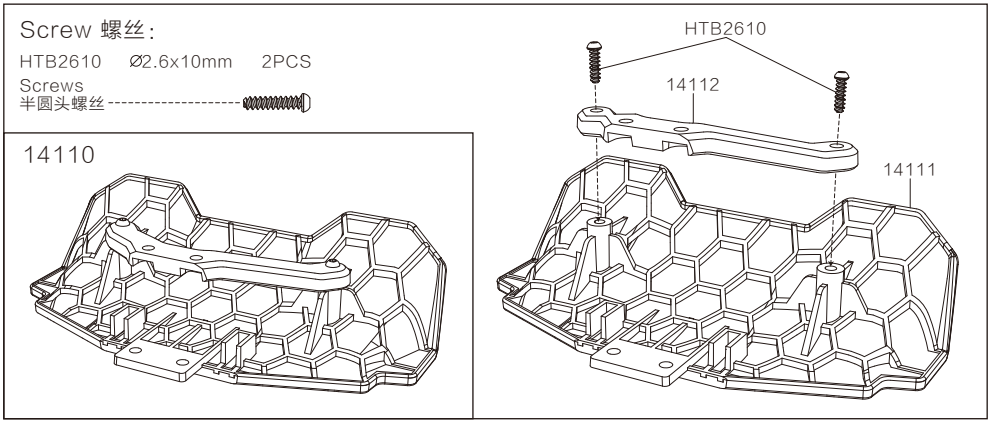

High Speed Car Assemble 高速车总装

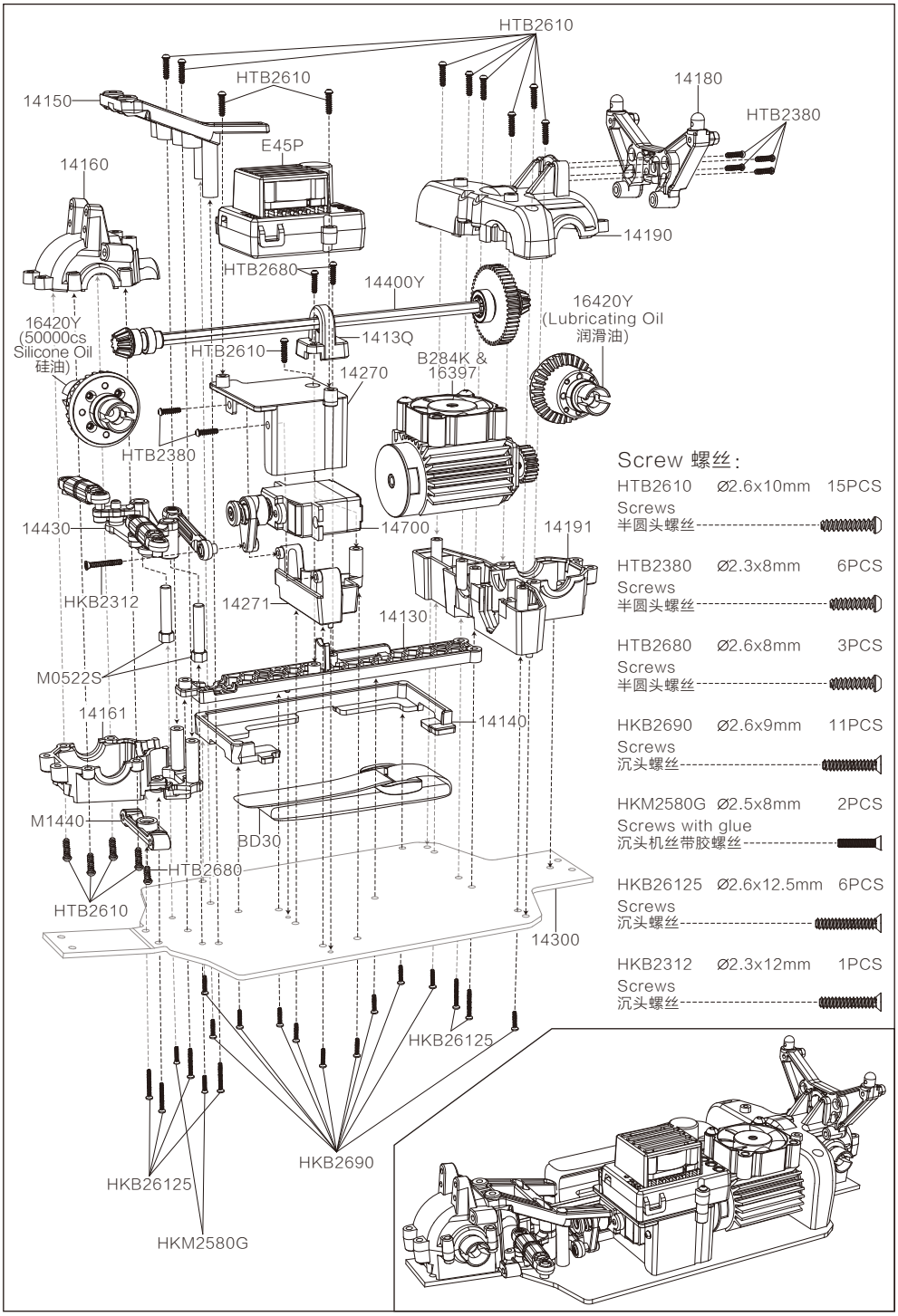

Screw 螺丝:

HTB2610 Ø2.6x10mm 15PCS
Screws
半圆头螺丝

HTB2380 Ø2.3x8mm 6PCS
Screws
半圆头螺丝

HTB2680 Ø2.6x8mm 3PCS
Screws
半圆头螺丝

HKB2690 Ø2.6x9mm 11PCS
Screws
沉头螺丝

HKM2580G Ø2.5x8mm 2PCS
Screws with glue
沉头机丝带胶螺丝

HKB26125 Ø2.6x12.5mm 6PCS
Screws
沉头螺丝

HKB2312 Ø2.3x12mm 1PCS
Screws
沉头螺丝

High Speed Car Assemble 高速车总装

Screw 螺丝:

HKB2312 Ø2.3x12mm 1PCS(2PCS)
Screws
沉头螺丝

HTB2680 Ø2.6x8mm 8PCS
Screws
半圆头螺丝

HTM4012 Ø4x12mm 2PCS
Screws
半圆头机丝螺丝

HTB2610 Ø2.6x10mm 6PCS
Screws
半圆头螺丝

HTHM3029 Ø3x29mm 4PCS
Screws
半圆头半牙螺丝

Iron shaft 铁轴:

M25425 4PCS
Lower swing arm fixed shaft
下摆臂固定轴

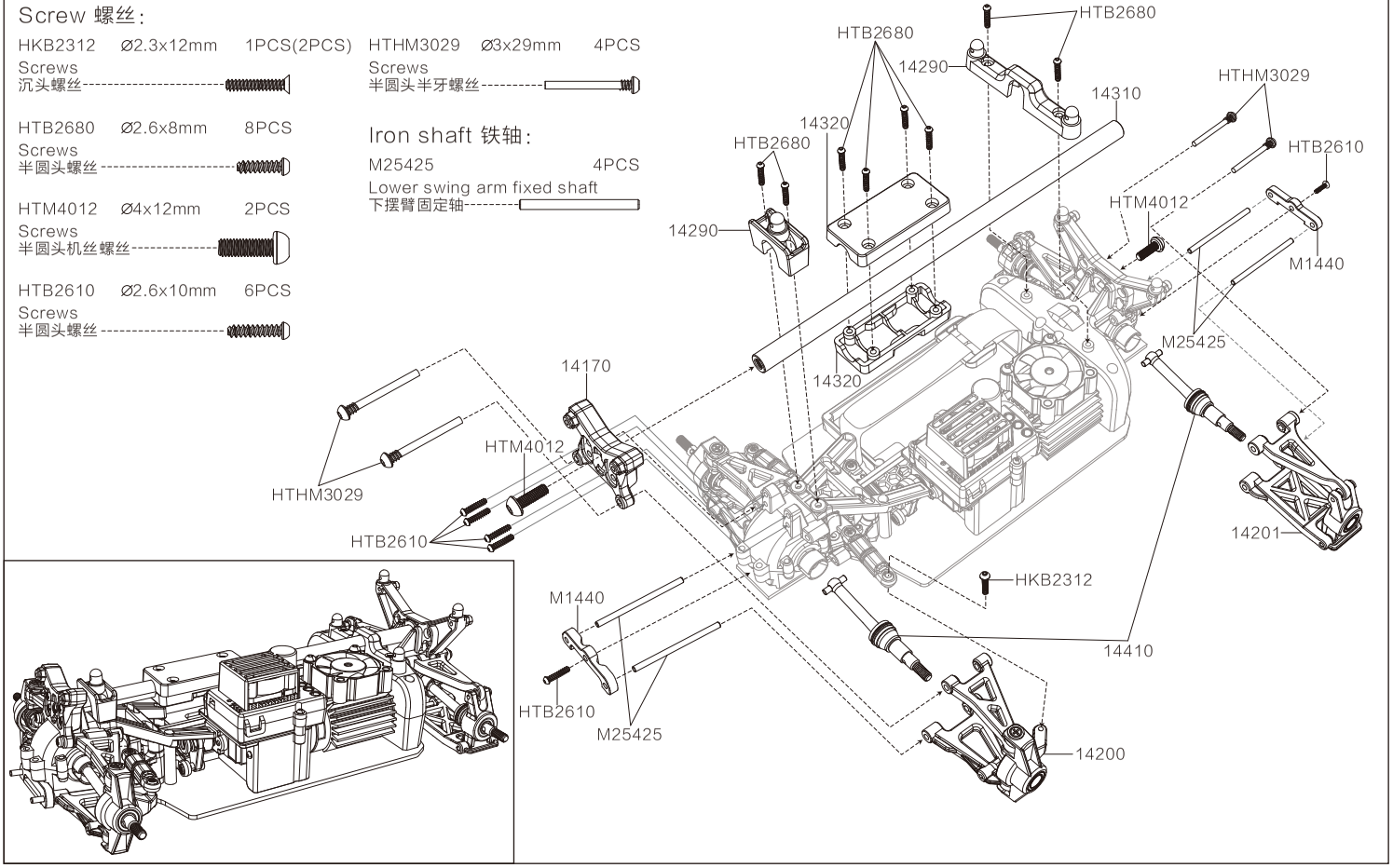

High Speed Car Assemble 高速车总装

Screw 螺丝:

HKB2312 Ø2.3x12mm 4PCS(8PCS)

Screws
沉头螺丝

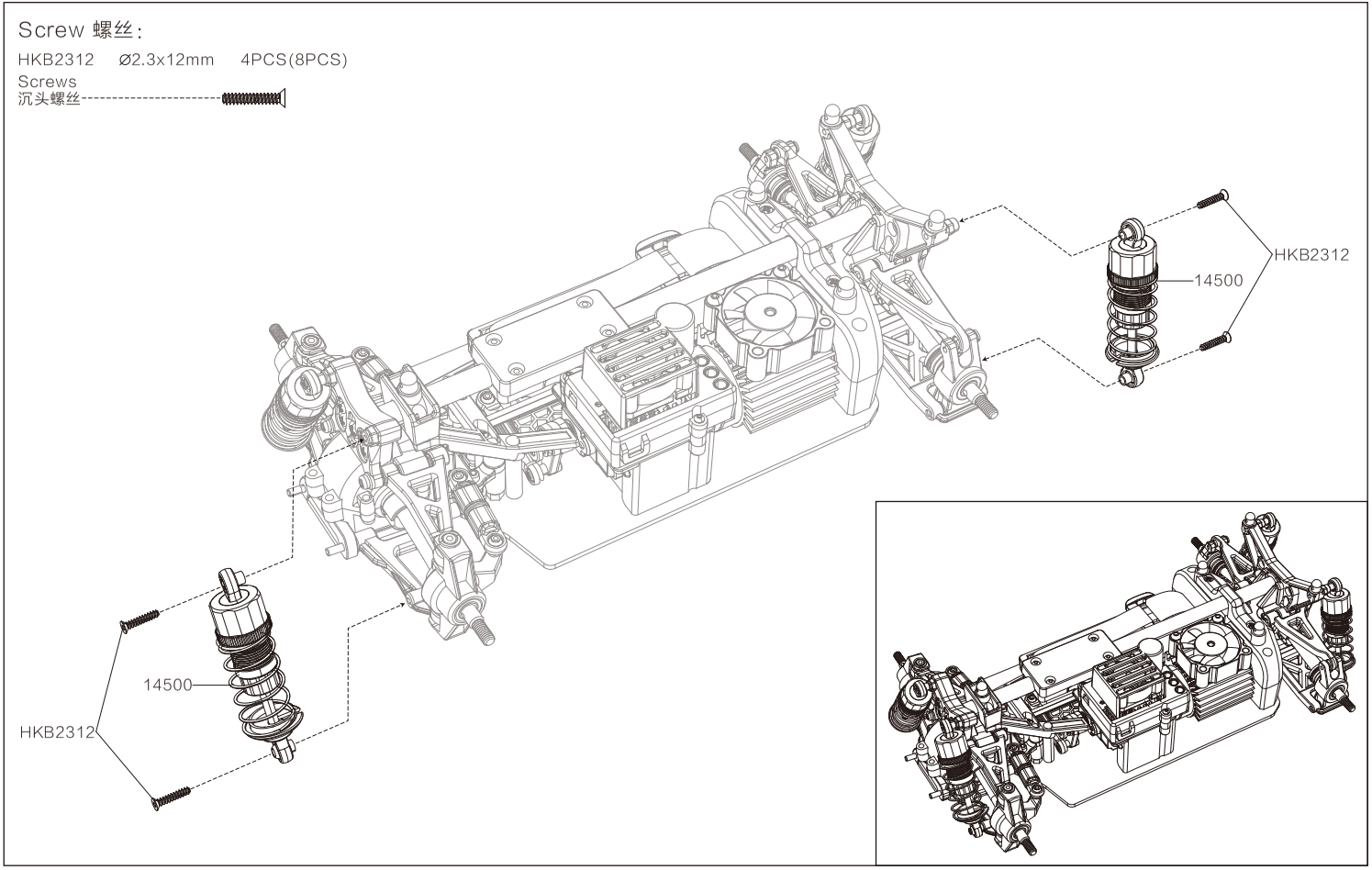

High Speed Car Assemble 高速车总装

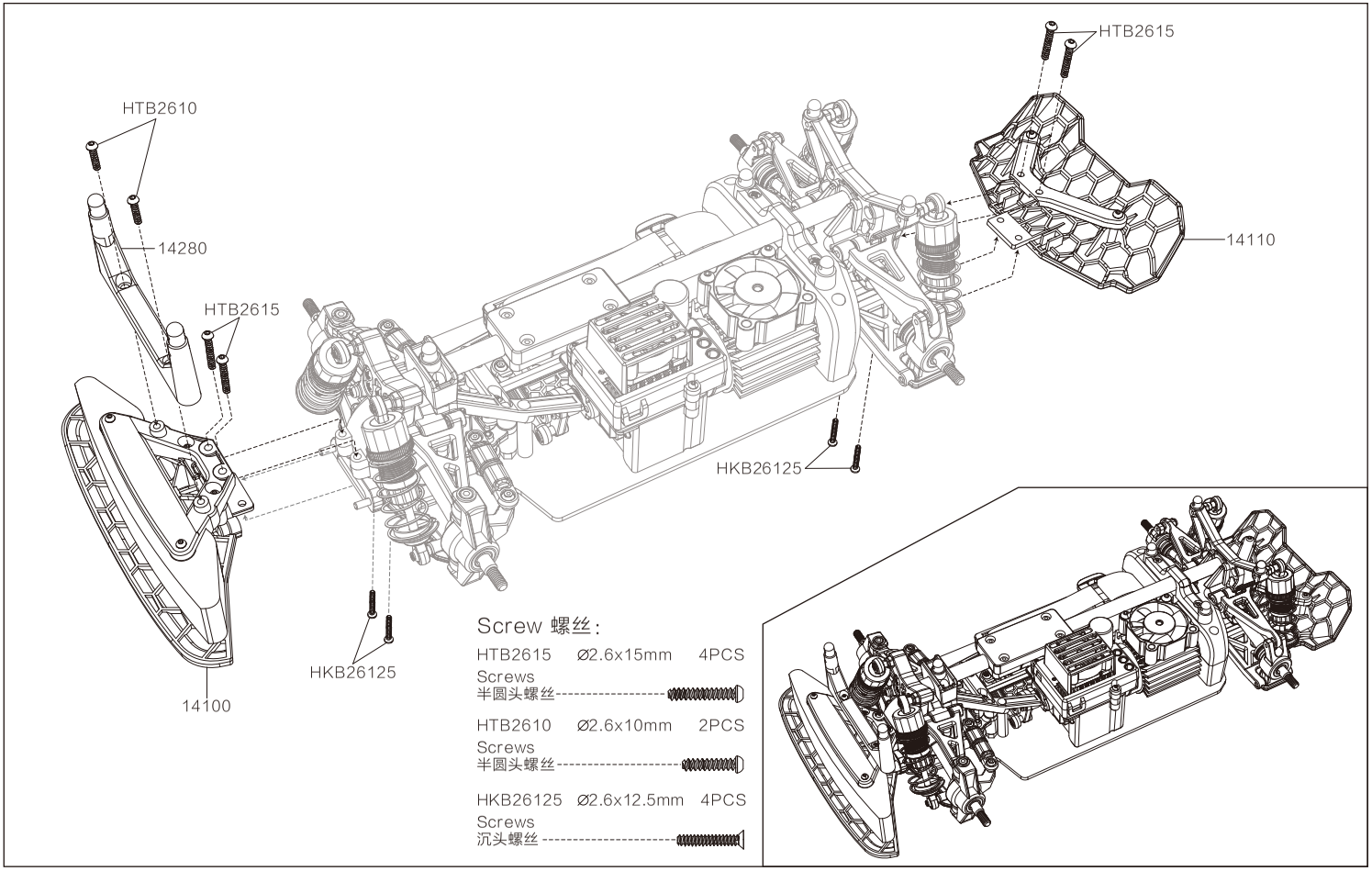

High Speed Car Assemble 高速车总装

Iron shaft 铁轴：

M20101 1PCS (4PCS)

Wheel hex pins
六角套铁轴

16440 1PCS (4PCS)

Wheel hex
六角套

Nut 螺母：

M40 1PCS (4PCS)

M4 Wheel lock nut
M4螺母

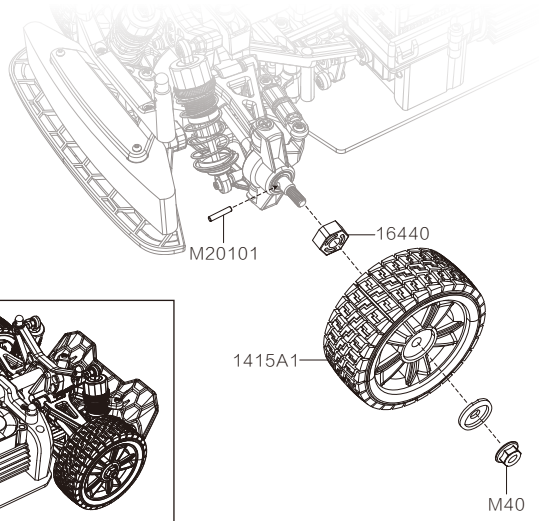

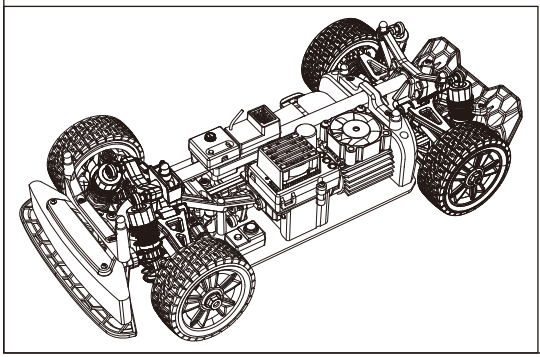

1415A1

Body Standard 车身标配
Hardness: Soft. Better abrasion resistance.
硬度：软，更好的耐磨性。

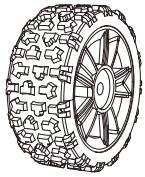

1415B1

Hardness: Medium. Average abrasion resistance.
硬度：中，耐磨性一般。

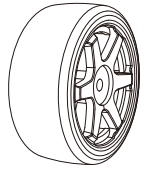

1415C

Hardness: High. Suitable for drifting.
硬度：高，适合漂移。

Spare Parts 配件表

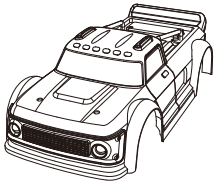	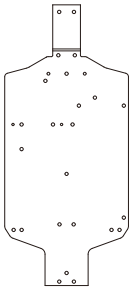	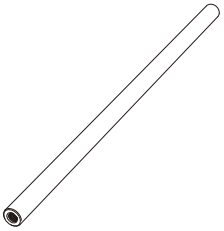	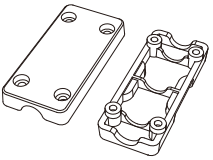
1430L1	14300	14310	14320
Body 车壳组件	Chassis 底盘	Center Brace Bar 中支撑杆	Center Shelf 中搁架
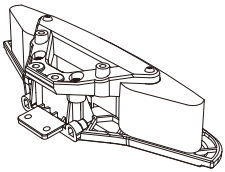	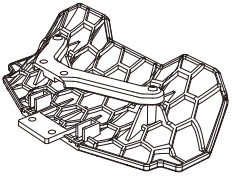	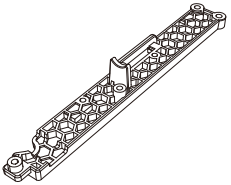	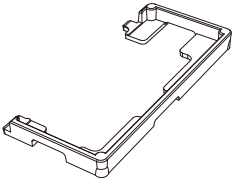
14100	14110	14130	14140
Front Bumper Assembly 前防撞组件	Rear Bumper Assembly 后防撞组件	Chassis Parts 底盘配件	Battery Clip 电池固定卡座
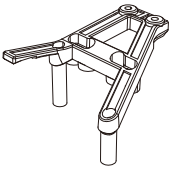	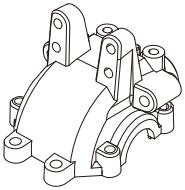	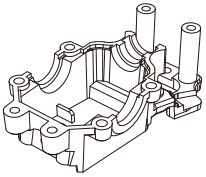	
14150	14160	14161	14170
Front Support Frame 前支撑架	Front Upper Gearbox Covers 前齿轮盖	Front Under Gearbox Covers 前差速底座	Front Shock Tower 前避震架

Spare Parts 配件表

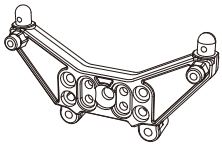	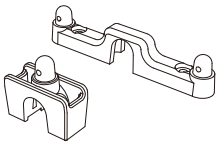	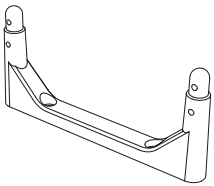	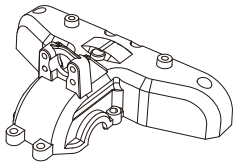
14180	14290	14280	14190
Rear Shock Tower 后避震架	Cover Body Pillars 防尘罩支架	Forward Body Pillars 前车壳支架	Rear Upper Gearbox Covers 后齿轮盖
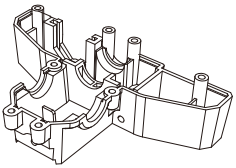	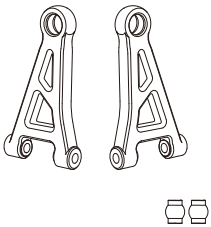	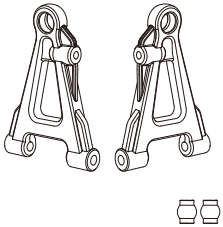	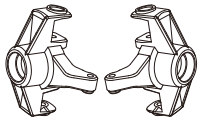
14191	14210	14220	14230
Front Under Gearbox Covers 后差速底座	Front Upper Suspension Arms (Including Ball Head) 前上摆臂(含球头)	Front Lower Suspension Arms (Including Ball Head) 前下摆臂(含球头)	Steering Block 转向座
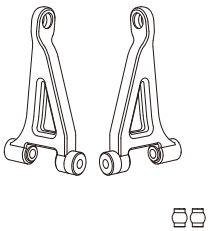	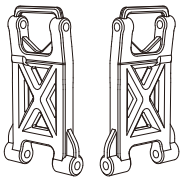	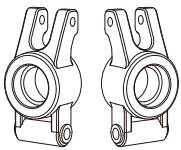	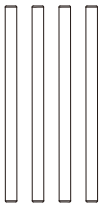
14240	14250	14260	M25465
Rear Upper Suspension Arms (Including Ball Head) 后上摆臂(含球头)	Rear Lower Suspension Arms 后下摆臂	Rear Hubs 后固定座	F/R Lower Swing Arm Fixed Shaft 下摆臂固定轴

Spare Parts 配件表

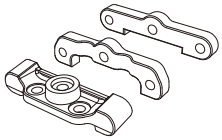	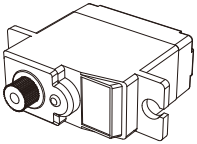	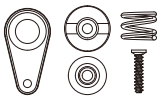	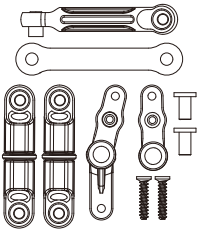
M1440	14701	14702	14430
F/R Reinforced Sheet 前后加强件	Servo 舵机	Servo Saver Assembly 舵机离合摆臂	Steering Assembly 转向传动组件
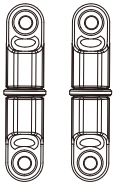	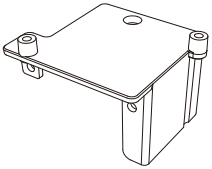	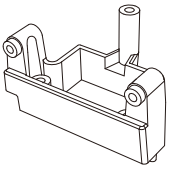	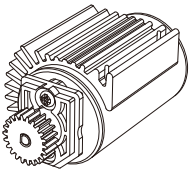
14431	14270	14271	B284K
Steering Linkage 转向拉杆 (2PCS)	Servo Upper Fix Frame 舵机上固定架	Servo Under Fix Frame 舵机下固定架	Motor Assembly 电机组件
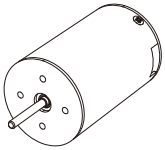	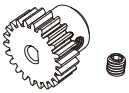	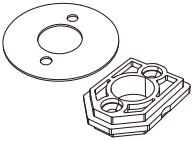	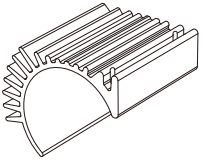
B28454	14392	16393	16395B
Brushless Motor 无刷电机	Motor Pinions 电机输出齿	Motor Guard 电机固定座	Motor Heatsink 散热片

Spare Parts 配件表

16397	16420Y	14400Y	16401Y
Motor Fan 风扇	Metal Gears Diff Assembly 全金属齿轮差速箱	Metal Gears Main Driving Set 全金属主传动组件	Spur Gear Assembly (Metal) 传动主齿轮组件(金属)
16402Y	14403	E45P	R3B
Drive Gear (Metal) 前锥齿(金属)	Centre Drive Shaft 主轴	Brushless ESC 无刷电子调速器	Receiver 接收器
T3B	14500	14410	M20101
Transmitter 遥控器	Oil Filled Shock 油压避震	Metal F/R CVD Shafts (2 Sets) 轮胎转动组件	Wheel Hex Pins 六角套铁轴 (8PCS)

Spare Parts 配件表

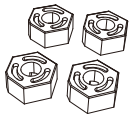	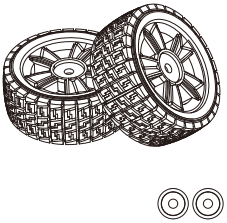	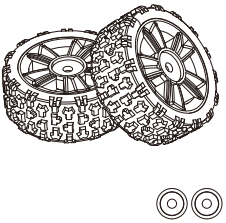	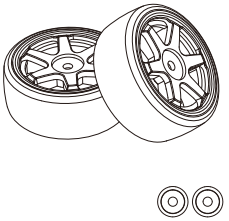
16440	1415A1	1415B1	1415C
Wheel Hex 六角套	Tires (Rubber) 橡胶轮胎 (2PCS)	Tires (TPR) TPR轮胎 (2PCS)	Tires (Drift) 漂移轮胎 (2PCS)
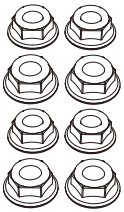	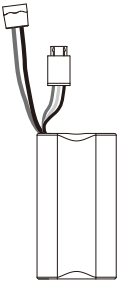	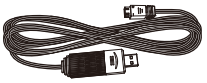	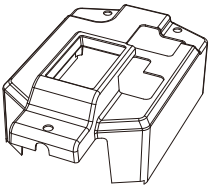
M40	B2S20	P2050	1430Z
M4 Wheel Lock Nut M4螺母 (8PCS)	Battery 电池	USB Charging Cable USB充电线	Dust proof cover 防尘罩
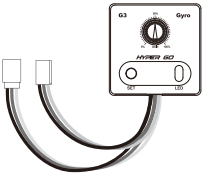	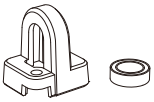	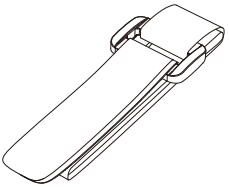	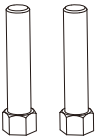
G3	1413Q	BD30	M0522S
Gryo 陀螺仪	Drive Shaft Bracket 主轴支撑架	Battery Base 电池固定带	Steering Shaft 转向轴 (2PCS)

Spare Parts 配件表

P810	P812	M001	Q1601
Screwdriver 螺丝刀	Hexagonal Wrench 六角扳手	Body Clips 车壳扣 (12PCS)	Steering Pivot Balls 球头 (8PCS)
Q1602	M2523	HTHM3029	M4018
Steering Pivot Balls 球头 (8PCS)	Rear Fixing Pin 后固定座插销 (4PCS)	Screws 半圆头半牙螺丝 (12PCS)	Screws 不锈钢紧定螺丝 (12PCS)
Q715	PH03		
Rubber washers 橡胶圈 (6PCS)	Screwdriver Sets 螺丝刀套装		

Screws 螺丝

HKM2580G	∅2.5x8mm	12PCS
HKB2012	∅2x12mm	12PCS
HTB2380	∅2.3x8mm	12PCS
HTB2680	∅2.6x8mm	12PCS
HTB2610	∅2.6x10mm	12PCS
HTB2615	∅2.6x15mm	12PCS
HKB2312	∅2.3x12mm	12PCS
HKB2690	∅2.6x9mm	12PCS
HKB26125	∅2.6x12.5mm	12PCS
HKB2615	∅2.6x15mm	12PCS
HTM4012	∅4x12mm	12PCS

Others 其他

R1810	Bearing 轴承	8PCS
R168Z	Bearing 轴承	8PCS

微功率短距离设备相关规定要求如下：

（一）符合“微功率短距离无线电发射设备目录和技术要求”的具体条款和使用场景，采用的天线类型和性能，控制、调整及开关等使用方法；

（二）不得擅自改变使用场景或使用条件、扩大发射频率范围、加大发射功率（包括额外加装射频功率放大器），不得擅自更改发射天线；

（三）不得对其他合法的无线电台（站）产生有害干扰，也不得提出免受有害干扰保护；

（四）应当承受辐射射频能量的工业、科学及医疗（ISM）应用设备的干扰或其他合法的无线电台（站）干扰；

（五）如对其他合法的无线电台（站）产生有害干扰时，应立即停止使用，并采取措施消除干扰后方可继续使用；

（六）在航空器内和依据法律法规、国家有关规定、标准划设的射电天文台、气象雷达站、卫星地球站（含测控、测距、接收、导航站）等军民用无线电台（站）、机场等的电磁环境保护区域内使用微功率设备，应当遵守电磁环境保护及相关行业主管部门的规定；

（七）禁止在以机场跑道中心点为圆心、半径5000米的区域内使用各类模型遥控器；

（八）微功率设备使用时温度和电压的环境条件；

（九）使用微功率短距离无线电发射设备应当符合国家无线电管理有关规定。

MADE IN CHINA

Instructions must be retained since it contains important information.